RELIABLE SECURE CONNECTIVITY

XSM5201 Series

User Guide

summary

1. Safety Precautions **3**
2. Overview **4**
2.1. Introduction 4
2.2. General features 5
2.3. Block diagram 5
2.4. Identification 6
3. Installation Instruction **6**
3.1. Mechanical Installation 6
3.1.1. Rack Mounting 6
3.1.2. Control Panel Mounting 7
3.2. Electrical Installation 7
3.2.1. Power Connection and DC Input 7
3.2.2. Relay Output Connection 8
3.2.3. AC Voltage Sensor Connection 8
4. Remote Management and SNMP **8**
4.1. Installation 8
4.2. Computer access configuration 9
4.3. Description of Web Page Screens 9
5. Digital Input and Dry Contacts **13**
5.1. Digital Input 13
5.2. Dry Contacts 14
6. Typical Application Diagrams **14**
6.1. Monitoring network voltage 14
6.2. Using as a thermostat 15
6.3. Activating the Generator 15
6.4. Alarm and Siren Setup 16
7. Warranty terms **16**

1. Safety Precautions

Before installing and powering up the product, read the instructions in this installation and operation manual carefully.

Attention symbol.

Danger and Electric Shock Hazard Symbol.

Warning

Installation must be carried out by qualified personnel. Hazardous voltage and energy can cause death or injury if the precautions in this manual are ignored.

Caution

Follow the instructions in this manual carefully. If in doubt, contact qualified technical support.

Note

Use the product only in an indoor environmentt.

2. Overview

2.1. Introduction

The Site Monitor is a monitoring and security module designed to provide accurate information via the web server and SNMP-V2 protocol. Its versatility allows seamless integration with various market-leading management software such as Zabbix, Grafana, LibreNMS, The Dude, and other systems.

With an intuitive web interface, the Site Monitor allows quick configuration and access to crucial information, including AC and DC voltage measurement, temperature, and humidity data, making environment monitoring swift and easy. Its broad applicability covers critical environments like POPs, Datacenters, Racks, and telecom towers, among other locations requiring real-time monitoring.

The product also offers additional functionality for equipment control via a relay output, enabling manual or automatic activation of connected devices. The "scheduling" configuration is a key feature, allowing users to program the start and end times and the days of the week for the relay to switch states. This configuration facilitates event scheduling and precise control of connected devices.

Furthermore, the Site Monitor XSM5201 includes three dry contact inputs and one digital input, providing flexibility and enabling its use in various ways, such as a smoke sensor, door sensor, magnetic sensor, presence sensor, battery sensor, and more (sensors not included). This allows effective customization to meet the specific needs of each installation.

2.2. General features

Table 2-1 General features

Input Characteristics		XSM5201
Connections	**Power**	Borne connector for wire up to 15mm²
	Sensors 1, 2, 3 and 4	8-way Terminal Connector
	Ethernet port	RJ45 PoE 802.3af Connector (10/100 Mbs)
Tensions	**Voltage**	10 - 60 VDC
	Sensor 4 (Digital)	5 - 60 VDC (Logic 1)
		<5 VDC (Logic 0)
Output Characteristics		**XSM5201**
Connections	**AC sensor**	Borne connector for wire up to 15mm²
	Relay	Borne connector for wire up to 15mm²
Voltage	**AC sensor**	60 - 270 VAC
	Relay	0 - 250 VAC
Current	**Relay**	Up to 5 A
General Specifications		**XSM5201**
Dimensions/Weight		34 x 110 x 113 mm / 0.297 kg
MTBF		>120,000 hours (estimated)
Operating Temperature		-10 to 60º C
Humidity		10 to 90% RH (non-condensing)
SNMP-V2 Protocol		Yes
Local WEB server		Yes
Ethernet port		1
AC detection input		1
Integrated temperature sensor		1
Integrated humidity sensor		1
Dry Contact Inputs		3
Digital Sensor Input		1
Programmable Relay Output		1
Device Power LED (Green)		Device on
Relay Activation LED (Green)		Relay activated

2.3. Block diagram

Figure 2-1 Site Monitor XSM5201 Block Diagram

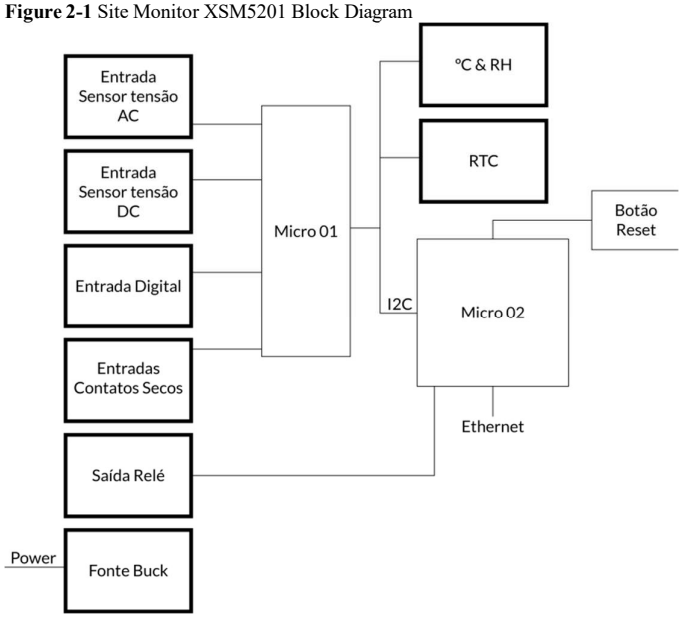

2.4. Identification

Figure 2-2 XSM5201 Site Monitor Identification

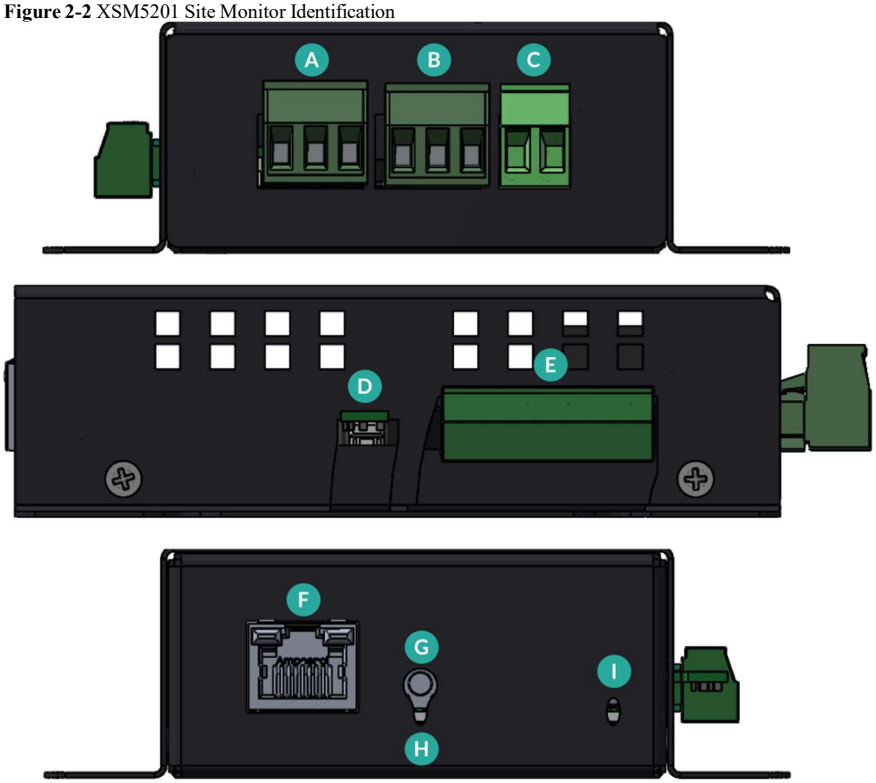

- **A -**AC Power Sensor Input.
- **B -**Relay Output Connection.
- **C -**DC Power Input Connection.
- **D-**Integrated temperature and humidity sensor.
- **E**- Dry and Digital Contact Inputs.
- **F**- Ethernet Port for Network Connection (ETH).
- **G**- Network Configuration Reset Button.
- **H**- Device Operation LED Indicator .
- **I**- Relay Operation LED Indicator.

3. Installation Instructions

3.1. Mechanical Installation

3.1.1. Rack Mounting

To mount the Site Monitor on the rack, place the screws in the mounting tabs and tighten them along the rail as illustrated below.

Figure 3-1 Rack Mounting the Site Monitor

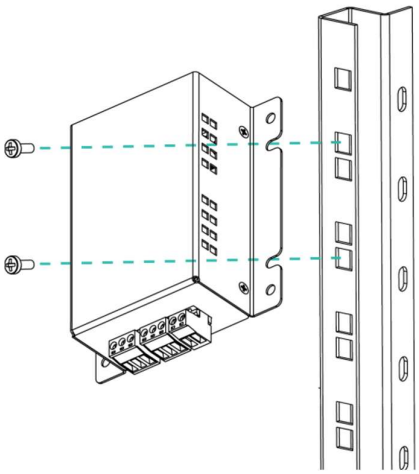

3.1.2. *Control Panel Mounting

To mount the Site Monitor on a control panel, use 4 screws and secure it as illustrated below.

Figure 3-2 Control Panel Mounting

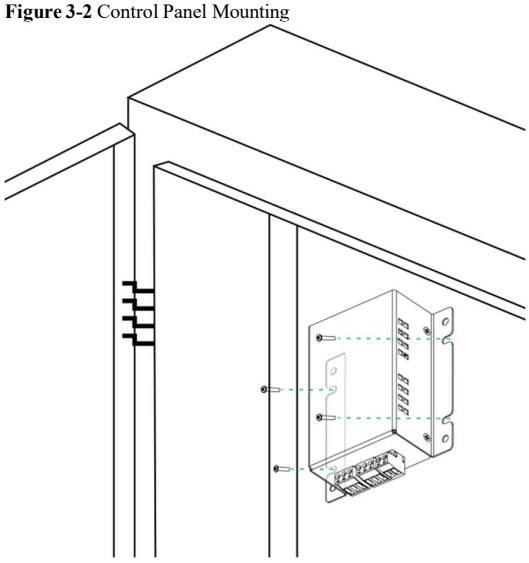

The device can be installed at 0° or 90°

3.2. Electrical Installation

3.2.1. Power and DC Input Connection

Connect the DC power connector with the correct polarities as indicated in the figure below.

Figure 3-3 Site Monitor XSM5201 DC Input Connection

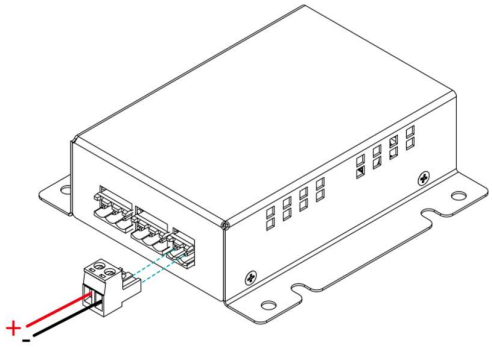

Warning

The Site Monitor XSM5201 is powered and reads the DC Input voltage.

3.2.2. Relay Output Connection

Figure 3-4 Relay Output Connection

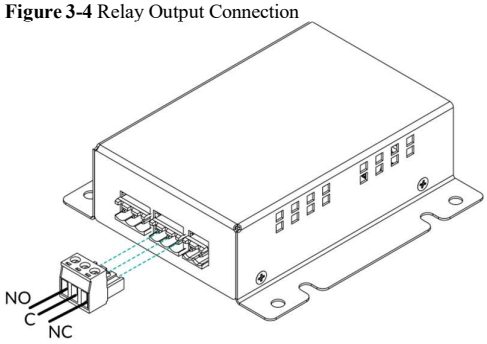

NO - Normally open

W - Common

NC- Normally closed

3.2.3. AC Voltage Sensor Connection

Figure 3-5 AC voltage sensor connection for monitoring

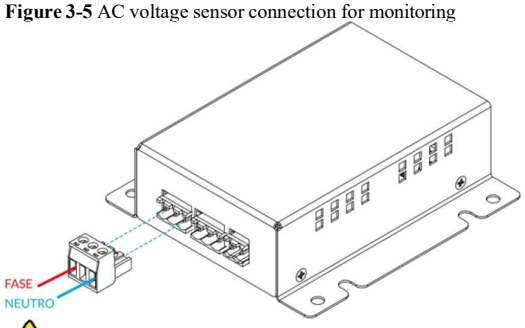

Warning

The Site Monitor XSM5201 is NOT powered by AC voltage.

4. Remote Management and SNMP

4.1. Installation

To integrate the Site Monitor XSM5201 into SNMP monitoring on the network, connect an Ethernet cable.

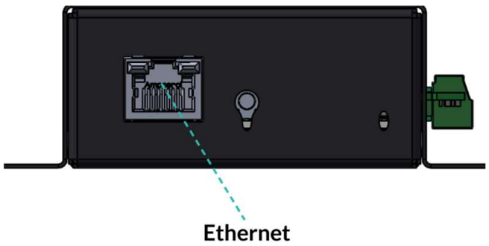

Figure 4-1 Ethernet cable connection location

Default IP: 192.168.1.50.

Username: admin

Password: agatel.

To reset to the initial IP and password configuration, press the Reset button for 10 seconds. The relay output of the Site Monitor will not be affected by pressing the Reset button.

4.2. Computer access configuration

1) Click: Start > Control Panel > Network and Sharing Center.

2) Click: Change Adapter Settings > Local Area Connection > Properties.

3) Select TCP/IP Version 4 (TCP/IPv4) > Properties. Configure your local network with the parameters. Example: IP:192.168.1.10, Subnet Mask: 255.255.255.0, Gateway IP: 192.168.1.1.

4) Confirm the current settings by clicking OK on the two configuration screens.

5) Open the internet browser and select Tools > Internet Options > Connections > LAN Settings.

6) Select the Automatically Detect Settings option. The other options should be disabled. Confirm the configuration by clicking OK.

7) In the browser, enter the default factory IP address 192.168.1.50 to open the Site Monitor configuration home page.

4.3. Web Page Screens Descriptions

4.3.1. Status Screen

Table 4-1 Status Screen

Site Monitor Status	
Name	**Description**
Date/Time	Displays the date and time set in the "Date/Time" tab.
Sensors	
Name	**Description**

Temperature 1	Displays the temperature measured by the integrated sensor.
Relative humidity 1	Displays the relative humidity measured by the integrated sensor.
AC voltage 1	Displays the AC voltage measurement.
DC voltage 1	Displays the DC voltage measurement.
Dry contact 1	Displays the current status of the dry contact input 1.
Dry contact 2	Displays the current status of the dry contact input 2.
Dry contact 3	Displays the current status of the dry contact input 3.
Digital sensor input 1	Displays the status of digital sensor 1 input.
Relay output 1	Displays the status of the relay output, indicating whether it is currently open or closed and how it is activated: manual, automatic or schedule.

4.3.2. Commands Screen

The Commands screen provides the ability to configure the output relay control mode and force a specific state. This feature allows the configuration of up to 3 different modes:

➢ **Manual Mode:**In manual mode, you can manually choose whether the output relay should remain open or closed.

Figure 4-2 Manual Mode

➢ **Automatic Mode:**In automatic mode, you can set maximum and minimum values for temperature, humidity, AC voltage, DC voltage and also the state of the dry contact input or digital input that will control the opening or closing of the output relay. This configuration allows the system to act autonomously, making decisions based on the conditions you have established, ensuring that the relay is automatically activated when the defined parameters are reached.

Figure 4-3 Automatic Mode

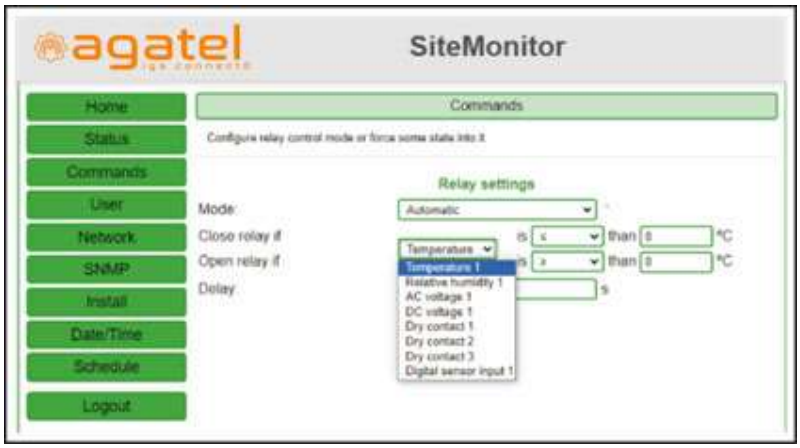

➢ **Scheduling Mode:**The settings for this mode are available in the "Schedule" tab, see item 4.3.8 Schedule screen. When set here, the last valid schedule will be applied.

Figure 4-4 Scheduling Mode

4.3.3. User Configuration Screen

Allows you to configure user credentials, replacing the current ones. They can be reset to factory default by the device's reset button.

4.3.4. Network Configuration Screen

Allows change and set new device and IP configuration values.They can be reset to factory default by the device's reset button.

Attention

Win correct settings may render the device inaccessible.

4.3.5. SNMP screen

Allows you to configure community read/write identifiers for SNMPv2c agent.

Configure up to 3 community names if you want the SNMP agent to respond to the NMS/SNMP manager with different read community names. If fewer than three communities are sufficient, leave the remaining fields blank.

4.3.6. Installation Screen

Tab to configure general information about the equipment, responsibility and regional information. Additionally, it allows you to change the date format, temperature and label the Site Monitor sensors.

4.3.7. Date and Time Configuration Screen (Date/Time)

Allows you to adjust the Site Monitor date and time so that time-based schedules work correctly, ensuring that scheduled operations occur at the desired time.

Table 4-2 Date and Time Setting Screen

Name	Description
Timezone	Allows you to configure the Site Monitor time zone to ensure the time displayed is correct for your geographic location. The copy command populates the time zone field based on your computer's time zone settings.
SNTP	It is a function that, when activated, allows you to synchronize the Site Monitor clock with a time server on the network.
Monitor Time website	The synchronization command synchronizes the Site Monitor time with the clock of the host (computer or server) to which it is connected. This feature is only available when SNTP is disabled. When you synchronize Site Monitor time with the host, Site Monitor updates its clock based on the host clock, ensuring time accuracy.

4.3.8. Schedule Configuration Screen

Allows you to configure up to 10 different schedules. You can individually enable each time slot within a specific schedule, and each slot spans a 24-hour period. This flexibility makes it possible to overlap days and combine multiple intervals, when necessary, to schedule events that span more than 24 hours.

Attention

When saving the schedule, the relay mode will be changed to “Schedule” mode, seen in item 4.3.2 Commands screen. Other relay mode settings will be lost.

Figure 4-5 Appointments screen

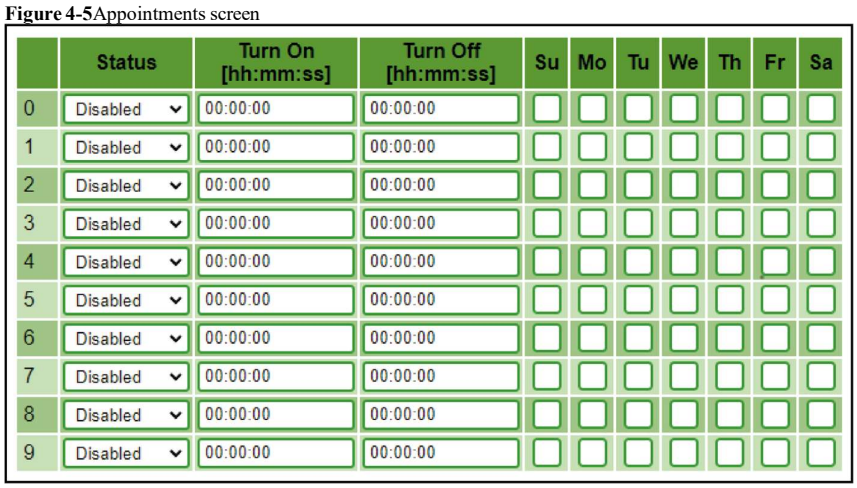

	Status	Turn On [hh:mm:ss]	Turn Off [hh:mm:ss]	Su	Mo	Tu	We	Th	Fr	Sa
0	Disabled	00:00:00	00:00:00							
1	Disabled	00:00:00	00:00:00							
2	Disabled	00:00:00	00:00:00							
3	Disabled	00:00:00	00:00:00							
4	Disabled	00:00:00	00:00:00							
5	Disabled	00:00:00	00:00:00							
6	Disabled	00:00:00	00:00:00							
7	Disabled	00:00:00	00:00:00							
8	Disabled	00:00:00	00:00:00							
9	Disabled	00:00:00	00:00:00							

Status:Field to select whether to activate or deactivate the schedule.
Turn On: Field to configure the time (in hh:mm:ss format) to close the Site Monitor output relay.
Turn Off:Field to configure the time (in hh:mm:ss format) to open the Site Monitor output relay.
Su/Mo/Tu/We/Th/Fr/Sa:Fields to mark the day(s) of the week on which the schedule will operate.

5. Digital Inputand Dry Contacts

5.1. Digital Input

The Site Monitor XSM5201 has 1 digital input that allows the connection of external signals, such as sensors or switches, to monitor specific events.

- The digital input sensor accepts voltage signals between 0 and 60 VDC;
- It will be understood as logic “1” for values between 5 and 60 VDC and logic “0” for values below 5 VDC;
- The input is isolated with an opto coupler and the pins are listed according to the following diagram:

Fig. 5-2 Optocoupler diagram Fig. 5-3 Application Digital input for battery theft

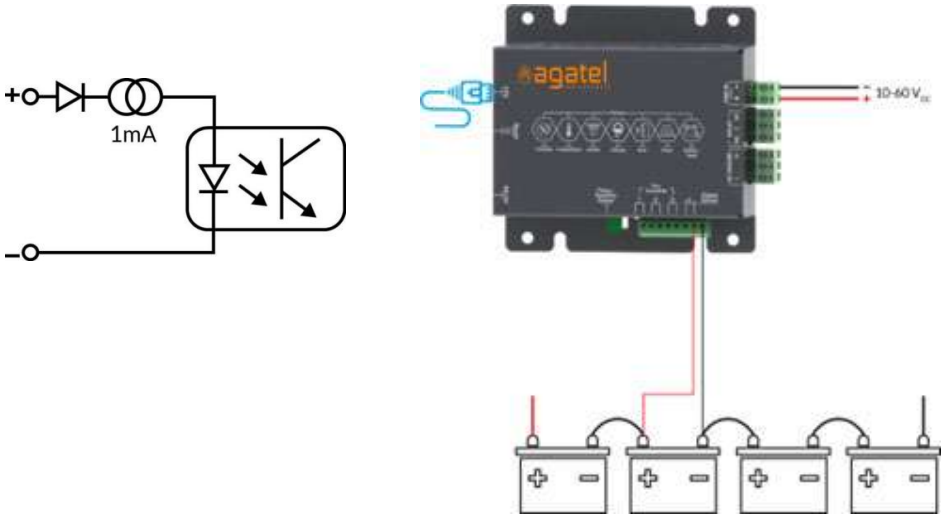

5.2. Dry Contacts

The Site Monitor XSM5201 has 3 dry contacts that can be used to activate or deactivate external devices, such as alarms, lights, or other equipment, depending on the user's needs.

Figure 5-1 Dry Contacts application

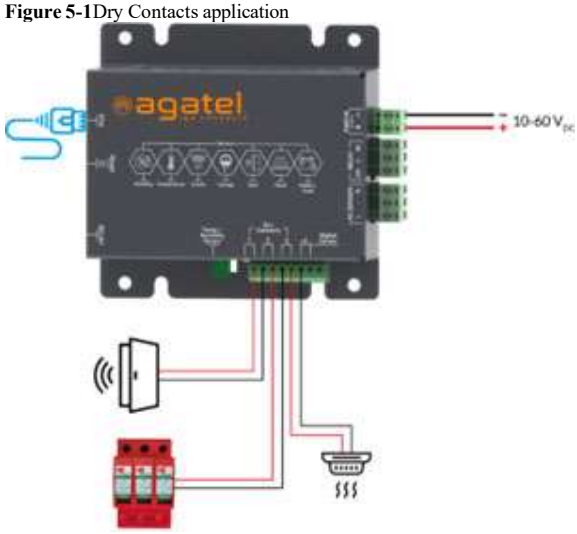

6. Typical Application Diagrams

6.1. Monitoring network voltage

Reads the mains AC voltage.

Figure 6-1 Application for monitoring network voltage

6.2. Using as a thermostat

To use the Site Monitor XSM5201 as a thermostat, configure the maximum and minimum temperature limits in the "Commands" tab to activate the relay through the integrated temperature sensor.

Figure 6-2 Site Monitor application for temperature sensor

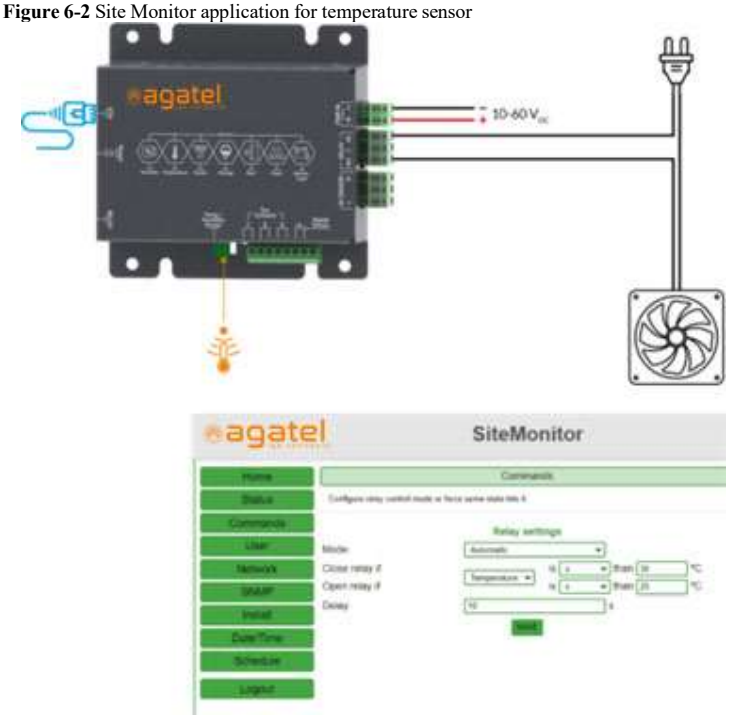

6.3. Activating the Generator

To activate the Automatic Generator, it is necessary to configure the maximum and minimum voltage limits in the "Commands" tab. In this way, if the battery voltage is below the established limit, the relay will be activated, activating the generator.

Figure 6-3 Generator drive applications

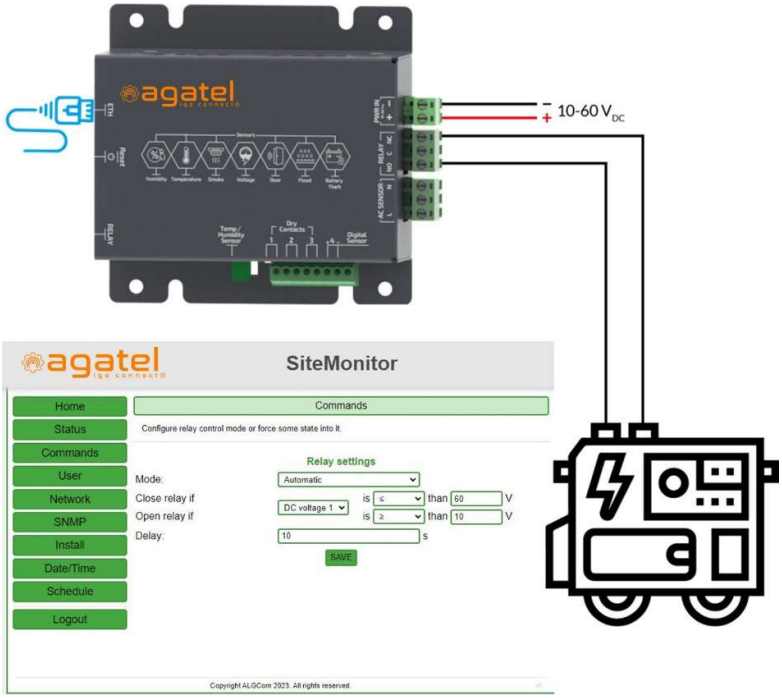

6.4. Example of Alarm and Siren Setup

The alarm will be triggered when you open the door.

Figure 6-4 Alarm and Siren Applications

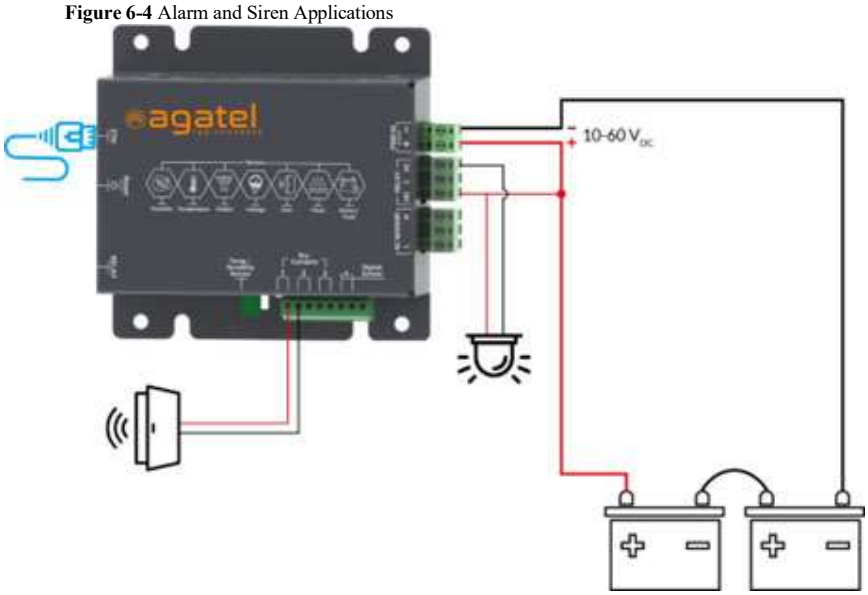

7. Warranty term

1 - Term and proof of warranty
- The warranty period granted by Agatel will be 1 YEAR, counting from the date of acquisition, according to the sales invoice.

- Information about the warranty period and expiration date can be obtained by contacting sac@Agatel.com.br . To do this, you must inform the model, serial number or batch number, manufacturing date and sales invoice number.

NOTE: The guarantee will only be valid upon presentation of the invoice.

2 - Attention to Warranty
- It is the installer's responsibility to comply with the regulations applied to the installation, as well as follow the instructions contained in this manual;

- Only use components and fastening elements supplied by Agatel in the assembly kit;

- Maintenance must be carried out by authorized and trained personnel, to minimize dangers to you and other people;

- Carry out at least one annual inspection of the installation to check the condition of the equipment;

3 - Loss of Warranty
The warranty does not cover, and the buyer is responsible for:
-Violation, modification, replacement of components, adjustment or repair carried out by unauthorized personnel;

-Damage suffered by the product, as a result of its installation and improper use outside the conditions established in this manual;

-Parts that naturally wear out with regular use such as: “connectors, power cable, fans, varistors or any other part that shows wear”;

-Board and components broken by electrical discharge, singed or with traces of damage caused by electrical discharge;

-Damage caused by not having a connection to earth;

-Protective elements such as varistors with apparent electrical discharge;

-Any other damage that is not classified as a manufacturing defect.

4 - Recommendations
-Carefully read the installation and operating instructions contained in this manual before putting the product into operation;

-Make sure that the supply voltage is adequate to the values established in this manual;

-Keep the product protected from bad weather (rain, humidity, wind, sunlight, etc.).

5 – Repair and Technical Assistance Services
Agatel offers its customers repair and technical assistance services for products. Pay attention to the information:

-Products out of warranty will be repaired according to a quote approved by the customer;

-Products repaired outside the original product warranty receive a 3 (three) month warranty on the repair;

-For products repaired within the warranty period, the warranty expiration date remains the original;

6 - Location of Execution of the Warranty Service

-For products not purchased directly from the Agatel factory, you must first contact the representative or authorized reseller where the purchase was made, so that this channel can activate the Agatel SAC.

-If you need to repair products within the warranty period, contact the authorized distributor of Agatel products in your country. If not, contact SAC Agatel directly.

- For complaints, comments, questions or suggestions about products or repairs, call our Customer Service: +44 121 809 8855.